NOTE: CONTRACTOR SHALL PROTECT IN PLACE ALL UTILITIES UNLESS OTHERWISE NOTED.

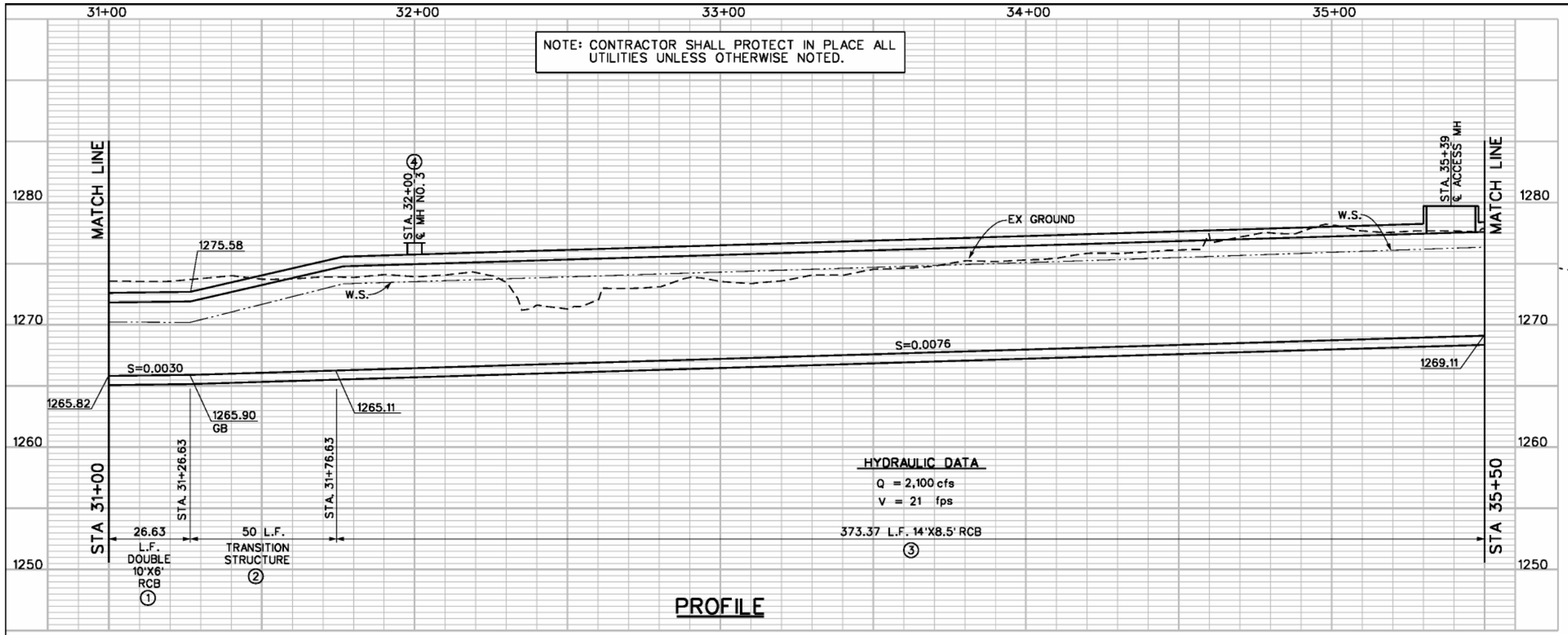

PROFILE

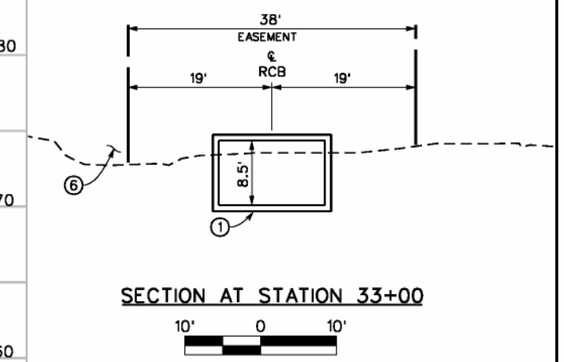

SECTION AT STATION 33+00

10' 0 10'

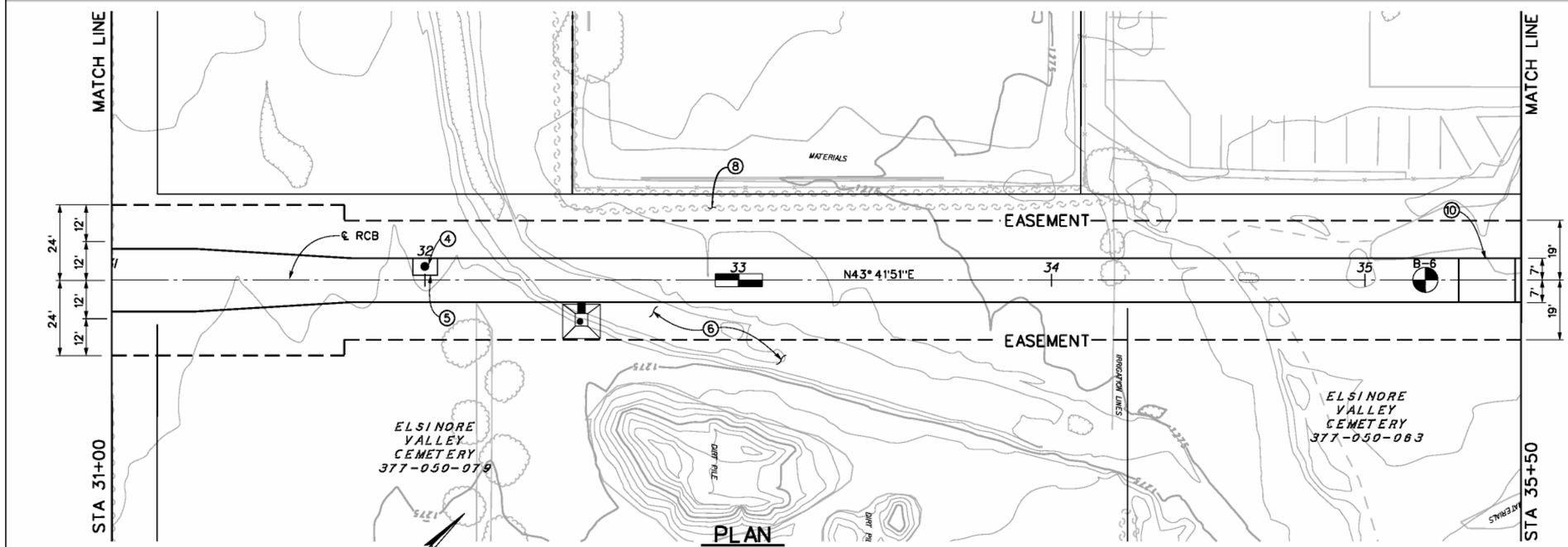

PLAN

20' 0 20'

CONSTRUCTION NOTES

1. CONSTRUCT DOUBLE 10'X6' REINFORCED CONCRETE BOX PER CALTRANS STD. D81, FLAT INVERT ALTERNATIVE.
2. TRANSITION WIDTH FROM 24.67' TO 14' PER DETAIL ON SHEET XY.
3. CONSTRUCT DOUBLE 10'X7' REINFORCED CONCRETE BOX PER CALTRANS STD D81, FLAT INVERT ALTERNATIVE.
4. CONSTRUCT MANHOLE NO. 3 RCFC AND WCD STD DWG NO MH253.
5. CONSTRUCT 6' X 6' X 6" CONCRETE PAD PER DETAIL ON SHEET XY.
6. FILL AREA PER GRADING DETAILS ON SHEET XY.
7. INSTALL CHAIN LINK RAILING TYPE 7 PER CALTRANS STD. B11-52.
8. REMOVE EX. BUSHES AS REQUIRED.
9. STRAIGHT GRADE FROM BOX EASEMENT TO TCE.
10. CONSTRUCT ACCESS MANHOLE PER STRUCURAL DETAILS ON SHEET XX. TOP OF ACCESS ROAD MANHOLE ELEV.

REGISTERED PROFESSIONAL ENGINEER KYLE GALLUP No. 74610 CIVIL STATE OF CALIFORNIA

REGISTERED PROFESSIONAL ENGINEER ROBERT J. CULLEN No. C44684 CIVIL STATE OF CALIFORNIA

PRELIMINARY★ SUBJECT TO REVISION

Don't Dig...Until You Call U.S.A. Toll Free 1-800-227-2600 for the location of buried utility lines. Don't disrupt vital services.

TWO WORKING DAYS BEFORE YOU DIG

REVISIONS			
REF.	DESCRIPTION	APPR.	DATE

RIVERSIDE COUNTY FLOOD CONTROL AND WATER CONSERVATION DISTRICT

DESIGNED BY: C.P., D.H., J.G.
DRAWN BY: MALEEK HOWARD
DATE DRAWN: MONTH 2013

RECOMMENDED FOR APPROVAL BY: DATE:

APPROVED BY: DATE:

ARROYO DEL TORO CHANNEL
STAGE 1
STA 31+50 TO STA 35+50

PROJECT NO. 3-0-0170
DRAWING NO. 3-196
SHEET NO. 7 OF XY